REV.	SPECIFICATION	ECN NO.	APPD.
R1		ECN180547	

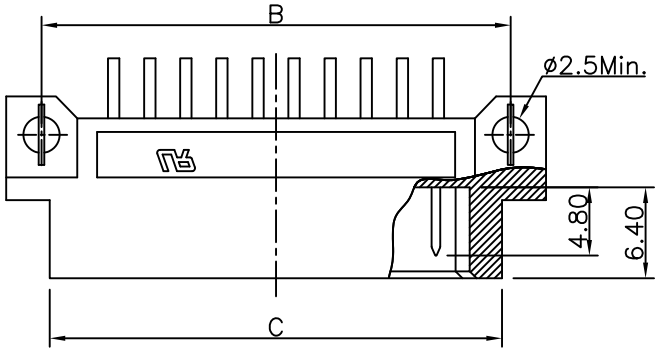

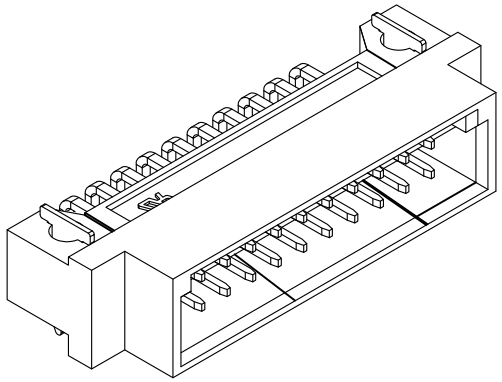

Material and Plating:

Housing: PBT, UL94V-0,Beige .
Contacts: Brass.
Lock: Phosphor bronze.

Gold Plated on Contact Area and 80u" Min Tin Plated on Solder Tail over Nickel 50u" Min .

Electrical Characteristics:

Current Rating: 2 AMP.
Dielectric Withstanding Voltage: AC 1000V For 1 minute.
Insulator Resistance: 1000MΩ min. at DC 500V.
Contact Resistance: 20mΩ max. at DC 100mA.
Operating Temperature: -55°C ~+125°C .

***RoHS Compliant**

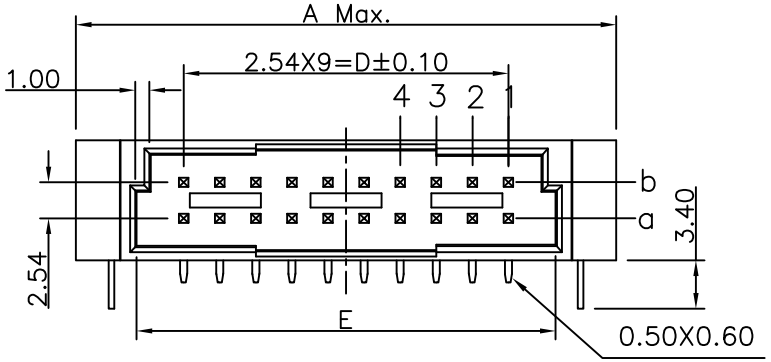

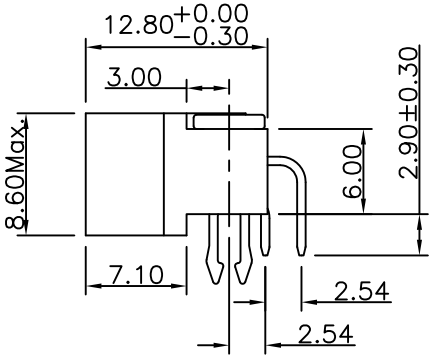

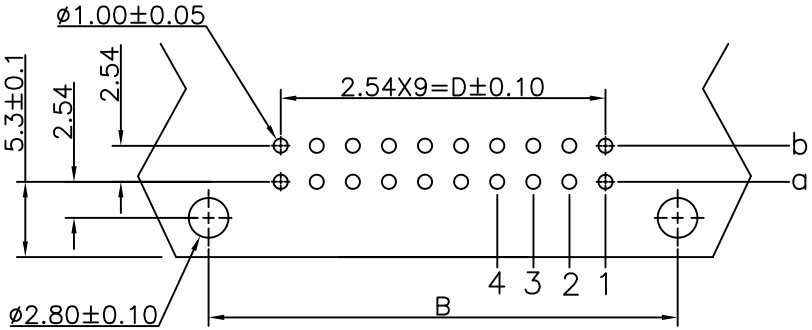

P.C. Board Layout
(Tolerance: ±0.05mm)

9001- 3 5 20 1 C xx L2 A

- Series: 9001-
- 3: 2.54mm
- 5: Male
- Position: 20
- 1: Dip Length: 1
- C: Dip Tin Contact Gold / G: Gold: C
- 00: G/F; 10: 10 μ"; 15: 15 μ"; 30: 30 μ": xx
- L2: With Lock: L2
- A: Tray Package: A

Dimension					
Pin	A	B	C	D	E
20/10	38.04	33.02	31.80	22.86	29.40
9001-35101CxxL2A	4 3 2 1 b a		a -	10	2.54mm
9001-35201CxxL2A	4 3 2 1 b a		a b	20	
P/N	Contact Arrange		Rows with Contacts	Pin	Pitch

Tolerances	Dwg. No.	9001-D0000-036	Title: 9001 Series DIN41612 Half B type Male	OUPIIN ELECTRONIC(KUNSHAN) CO., LTD.
x = ±0.5	Projection			P/N: 9001−35201CxxL2A
.x = ±0.25	Unit mm	Scale 1:1		SHEET 1/1 Ver.No. R1
.xx = ±0.15	Drawn By	Echan 05/25'18		