REV.	SPECIFICATION	ECN NO.	APPD.
R1			

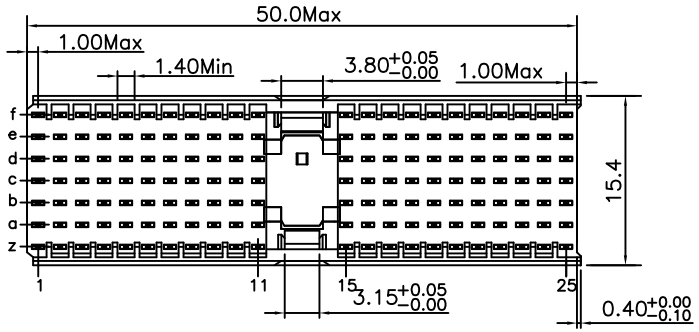

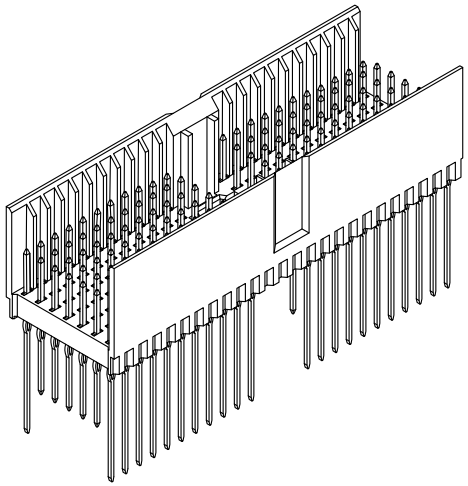

Material:

Housing: Thermoplastic Polyester Glass Filled UL94V-0
Contacts: Copper Alloy.

Electrical Characteristics:

Current Rating: 1 AMP.
Dielectric Withstanding Voltage: AC 750V For 1 minute.
Insulator Resistance: 10000MΩ min.at DC 500V.
Contact Resistance: 20mΩ max.at DC 100mA.
Operating Temperature: -55°C ~ +125°C .

***RoHS Compliant**

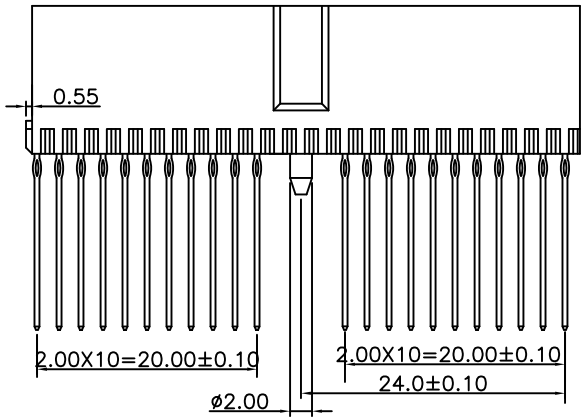

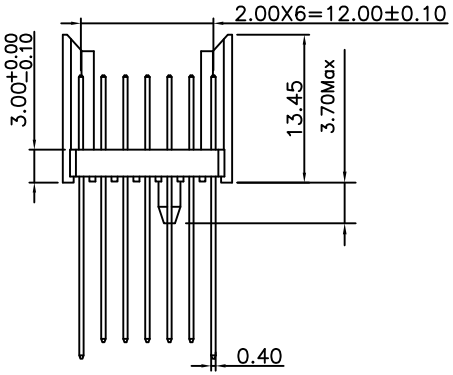

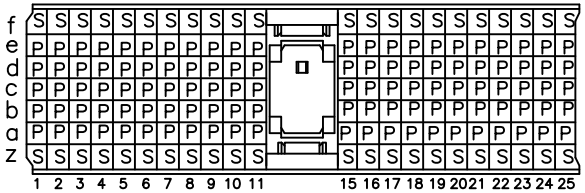

CONTACT LAYOUT

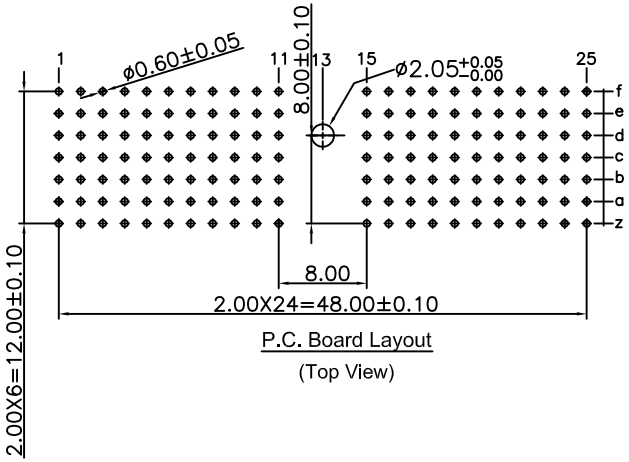

P.C. Board Layout
(Top View)

9111- 7 1 A 154 I C xx U

- Series
- 7Row
- 1: Male
- A: Type A
- Housing Type
- I: I Option
- C: Dip Tin Contact Gold
- G: Gold
- 10: 10 u"
- 30: 30 u"
- U: Tube Package

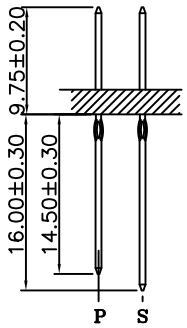

Tolerances	Dwg. No.	9111D71019	Title: 9111 Series 2.00 Hard Metric Connectors Male Type A	OUPIIN ELECTRONIC(KUNSHAN) CO., LTD.
x = ±0.5	Projection			P/N: 9111-71A154ICxxU
.x = ±0.25	Unit mm	Scale 1:1		SHEET 1/1 Ver.No. R1
.xx = ±0.15	Drawn By	Zhu QL 08/15'12		