REV.	SPECIFICATION	ECN NO.	APPD.

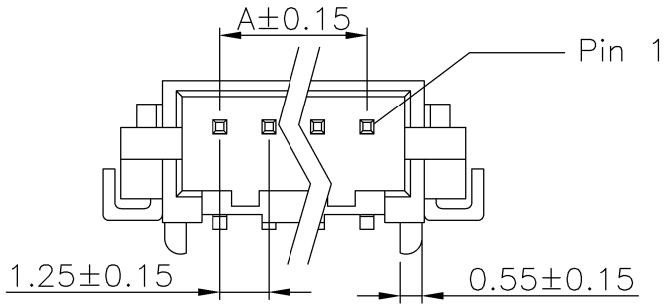

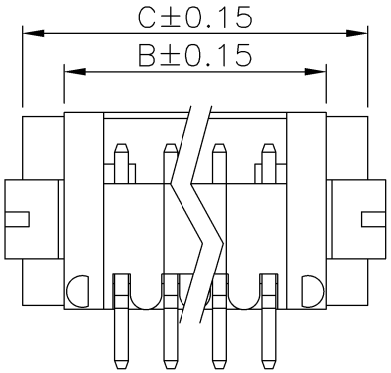

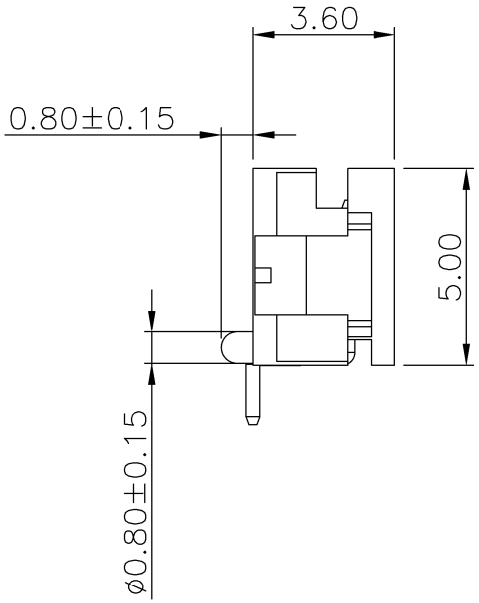

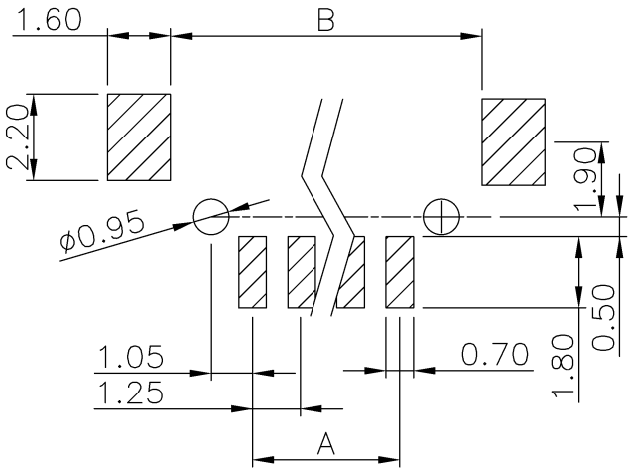

P.C. Board Layout

Material:
Housing: PA66, UL94V-0.
Contacts: Brass, Tin Plated over Nickel.
Solder Tab: Brass, Tin Plated.

Electrical Characteristics:
Current Rating: 1 AMP.
Dielectric Withstanding Voltage: AC 500V.
Insulation Resistance: 500MΩ min.
Contact Resistance: 20mΩ max.
Operating Temperature: -25°C~+85°C.

***RoHS Compliant**

4574- 1 X xx T D1 T

- Series: 4574-
- Single Row: 1
- Positions: xx
- T:Tin Plated: T
- D1: SMD Side Entry (Right Angle): D1
- T:Tape & Reel Package: T

Position	Dimension		
	A	B	C
02	1.25	4.15	6.25
03	2.50	5.40	7.50
04	3.75	6.65	8.75
05	5.00	7.90	10.00
06	6.25	9.15	11.25
07	7.50	10.40	12.50
08	8.75	11.65	13.75
09	10.00	12.90	15.00
10	11.25	14.15	16.25
11	12.50	15.40	17.50
12	13.75	16.65	18.75
13	15.00	17.90	20.00
14	16.25	19.15	21.25
15	17.50	20.40	22.50

Tolerances	Dwg. No.	4574D01003	Title: 4574 Series 1.25mm Wire To Board Header SMT 90° Type	OUPIIN ELECTRONIC(KUNSHAN) CO., LTD.
.x = ±0.35	Projection			P/N: 4574-1XxxTD1T
.xx = ±0.25	Unit mm	Scale 1:N		SHEET 1/1 Ver.No. A3
.xxx = ±0.15	Drawn By	Martin 09/15'22	① 704	